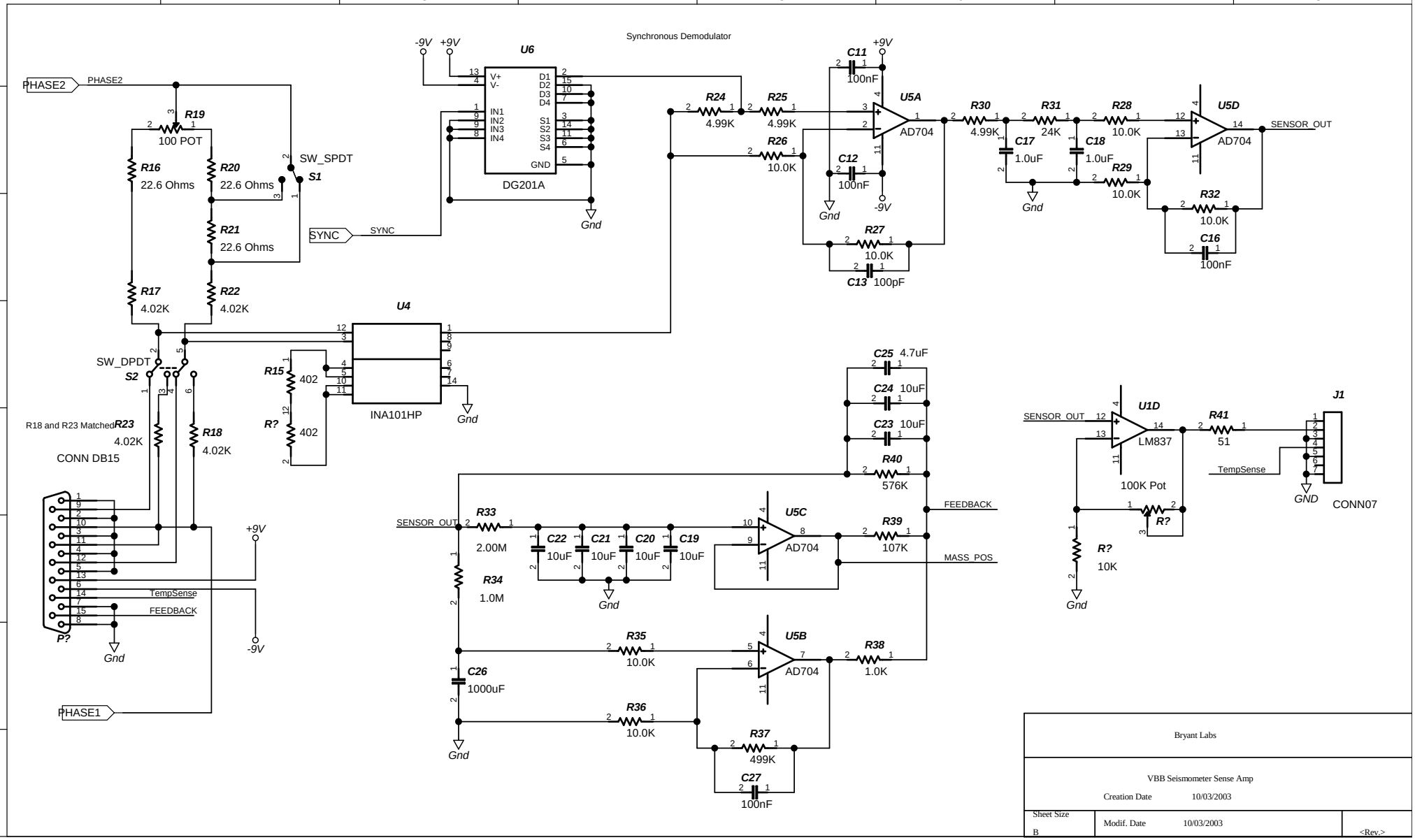

Bryant Labs

VBB Seismometer Sense Amp

Creation Date 10/03/2003

Sheet Size B

Modif. Date 10/03/2003

<Rev.>